REPIPE

Pipe, Connections & Valves

"Connecting Australia"

WAFER BUTTERFLY VALVE LEVER OP.

ISO 9001 CERTIFIED COMPANY

WAFER BUTTERFLY VALVE – LEVER OPERATED

FEATURES

- Lever Operated
- Wafer to Suit Table D/E & ANSI 150
- Full Bi-Directional Shut Off
- Stainless Steel Trim
- FBE Coated Body
- ISO Top Mount

OPTIONS

- Also Available - Gear Box, Air, Electric, Hydraulic
- Actuation is Available.

TECHNICAL DATA

- Code: F-BVCW-(size DN)-E
- Size Range: DN50 – DN600
- Pressure Rated: 1600 kPa (DN50 – DN300)
  1000 kPa (DN350 – DN600)

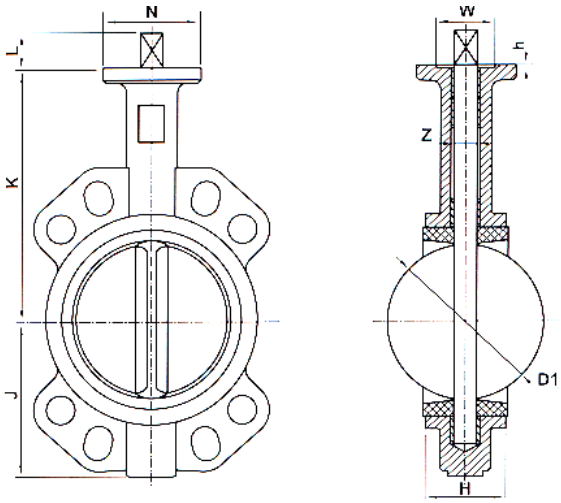

MATERIALS

Part Name	Material
Body	Cast Iron
Disc	Stainless Steel 316
Stem	Stainless Steel 410
Seat	EPDM
O-Ring	Nitrile

DIMENSIONS

DN	K	J	H	Z	L	D Table D/E	D ANSI 150	D1	N	d4	D4	W	S
50	161	80	43	12.5	32	114	120.5	52.5	65	7	50	36	9
65	175	89	46	12.5	32	127	139.5	63.8	65	7	50	36	9
80	181	95	46	14.5	32	146	152.5	78.1	65	7	50	36	9
100	200	114	52	16.5	32	178	190.5	103.8	90	9	70	56	11
125	213	127	56	18.5	32	210	216.0	123.1	90	9	70	56	14
150	226	139	56	18.5	32	235	241.5	155.0	90	9	70	56	14
200	260	175	60	22.5	40	292	298.5	202.1	125	11	102	71	17
250	292	203	68	30.5	40	356	362.0	250.1	125	11	102	71	22
300	337	242	78	30.5	40	406	432.0	301.1	125	11	102	71	22
350	368	267	78	31.6	45	470	476.5	333.5	125	12	102	71	-
400	400	309	84	33.2	51	521	540.0	389.6	175	18	140	101	-
450	422	328	103	38.0	51	584	578.0	440.5	175	18	140	101	-
500	480	349	127	41.2	64	641	635.0	491.6	175	18	140	101	-
600	562	440	150	50.5	70	756	749.5	592.5	210	22	165	131	-

SYDNEY- NEWCASTLE – PERTH – 1300 362 954 – sales@repipe.com.au

Distributors of Quality Products Australia Wide